AUDI Q7 2006

MOCSKT **070**

max Kg. 60

L2

MOCSRR0AL008 cm 110
MOCSRR0AC012 cm 110

4 - L1104/1

4 - L1104

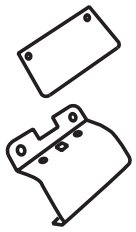

4 - RC29200025

8 - RCVM6X25Q

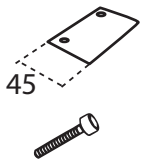

4 - RC20200026

4 - RC20200408

1 - RCBR5 normale

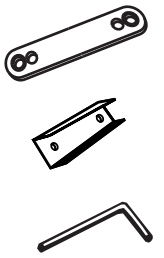

1

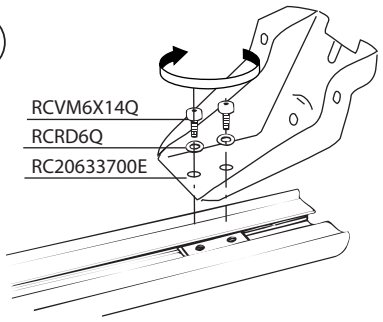

2

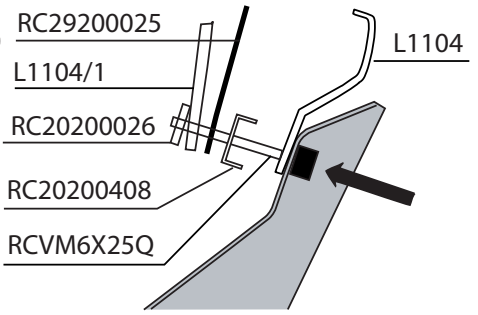

3

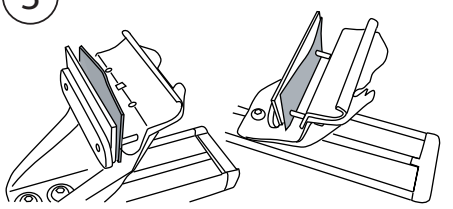

4

! ! !

5

! ! !

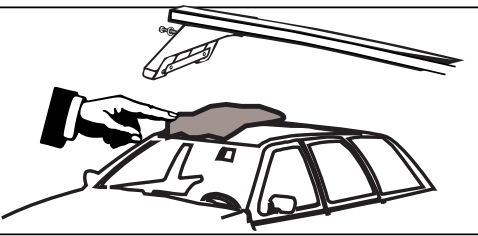

6

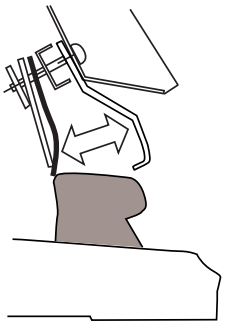

7

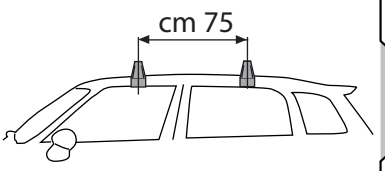

8

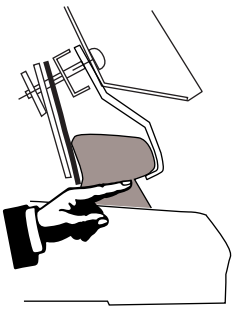

9

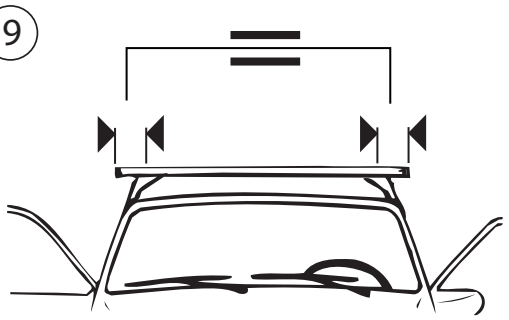

10

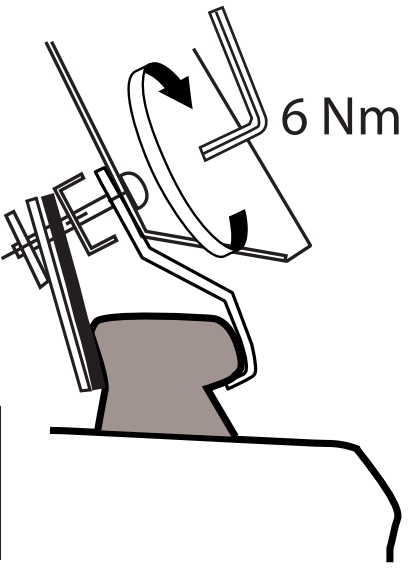

MODULA case system
email: modulacs@modulacs.com
web site: www.modulacs.com

Modula s.r.l.
Loc. Penisola, 20/A
61026 Piandimeleto (PU) ITALY
phone +39 0722/700070
fax +39 0722/720017

18-01-2016