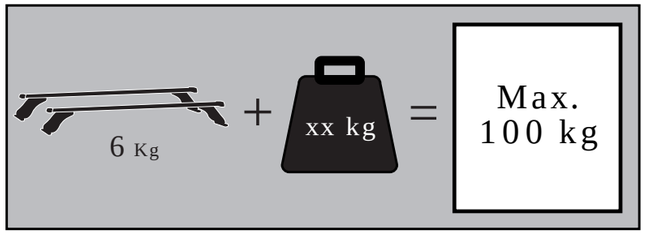

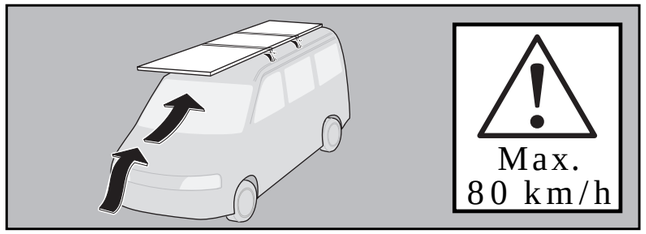

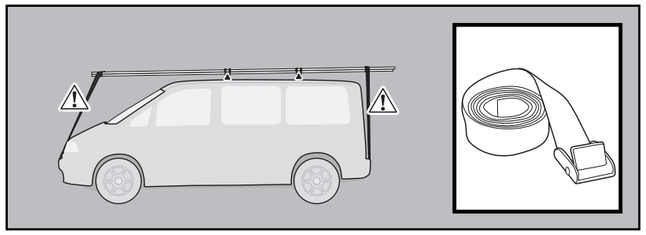

Thule Sweden AB, Box 69, 330 33 Hillerstorp, SWEDEN www.thule.com info@thule.com

642•3DF/501-7151

Footpack
9511, 9521

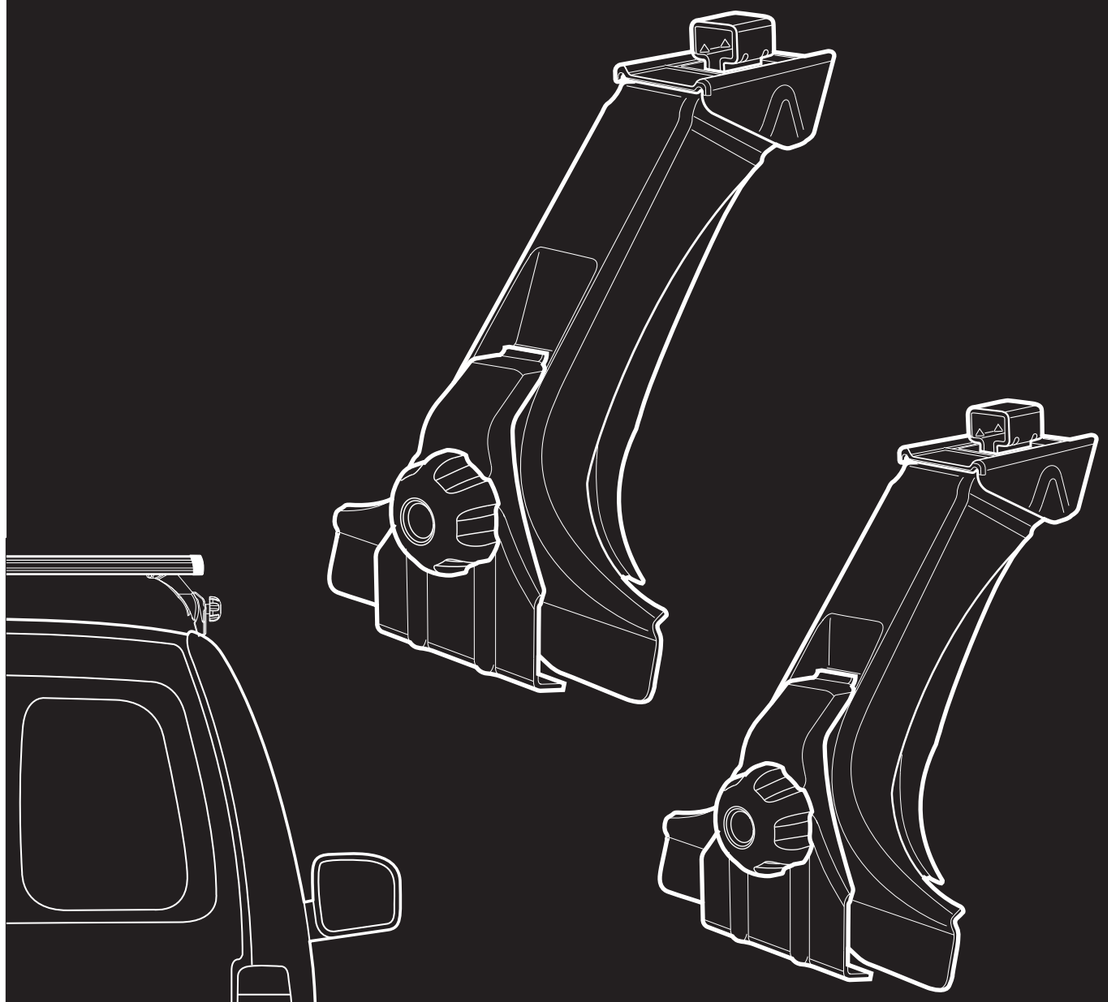

THULE® SWEDEN
PROFESSIONAL

!

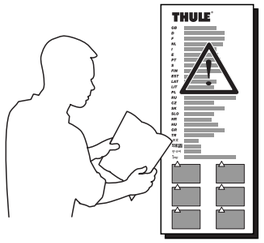

i

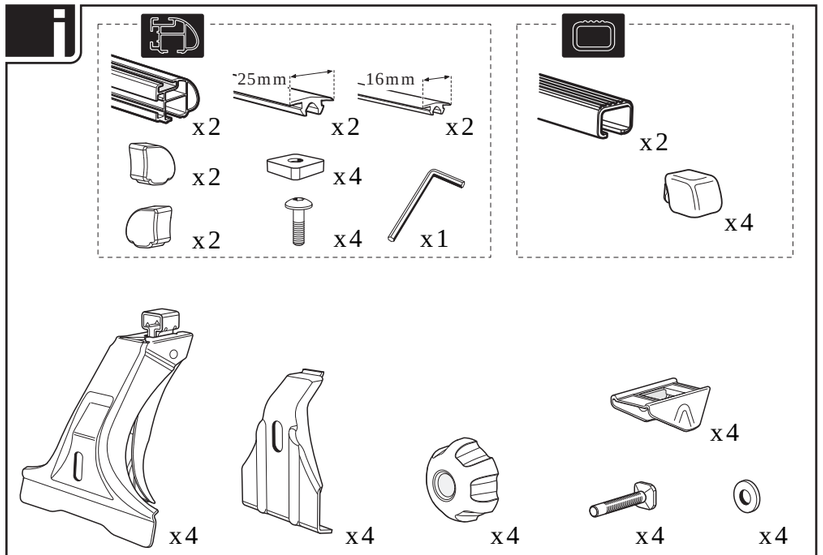

1

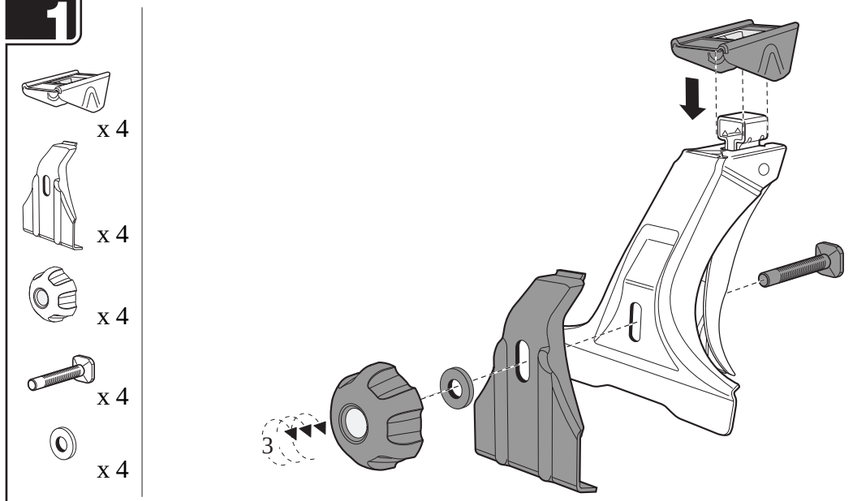

2

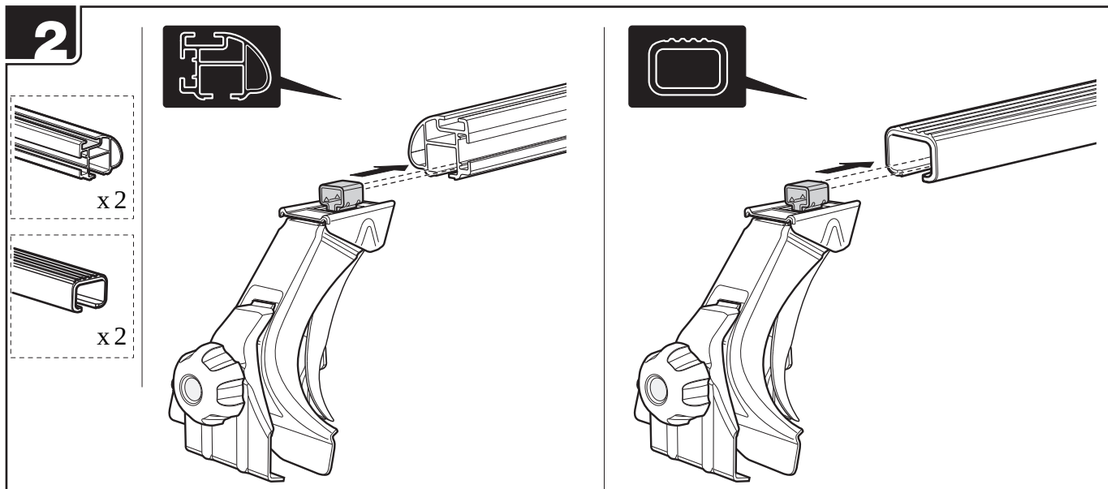

3

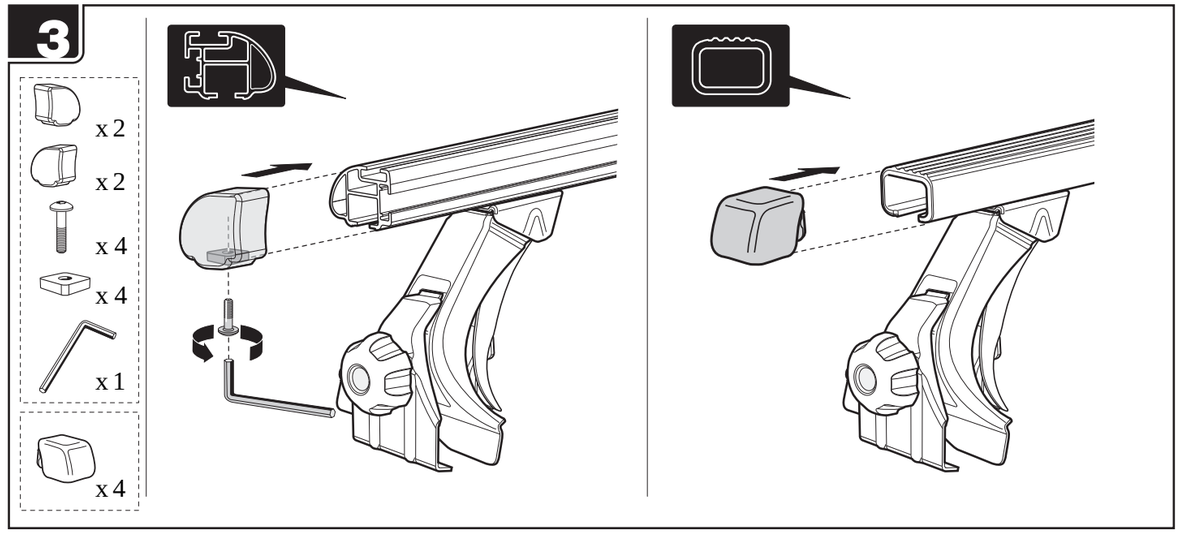

4

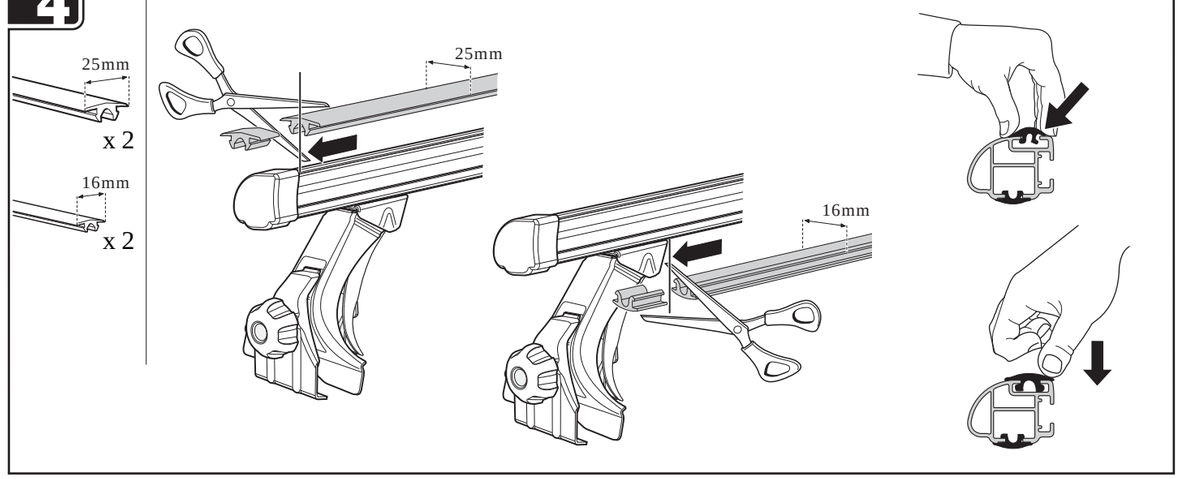

5

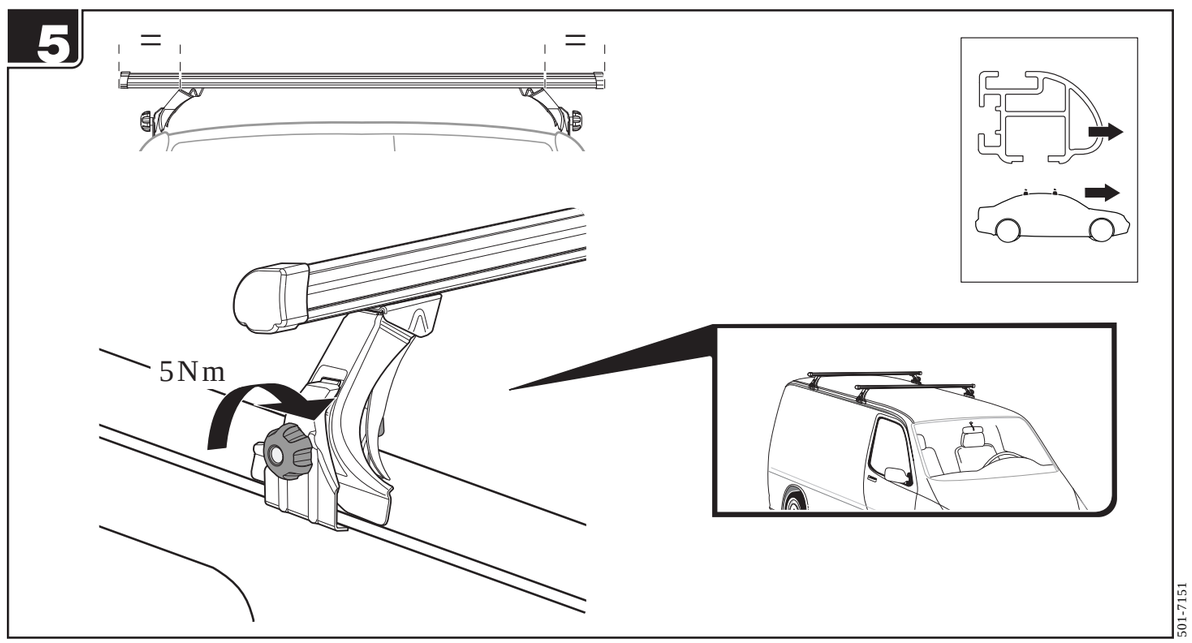

501-7151